https://dx.doi.org/10.22161/ijaers.5.1.2 ISSN: 2349-6495(P) | 2456-1908(O)

Vibration Analysis of Silencer Based on FEM and FFT Analyser

Sonali D. Alone[1], M.A.Mohite[2]

P.G.Student, Department of Mechanical Engineering,Sinhgad Institute of Technology, Lonavala, Maharashtra, India
Associate Professor,Department of Mechanical Engineering,Sinhgad Institute of Technology, Lonavala, Maharashtra, India

Abstract**—***Silencer was considered with and without modifying in order to reduce the vibration. Design and modelinghave been done with specifying different material properties. Finite Element Method was used for the modeling and simulations. The harmonic analysis has been performed by using ANSYS 18.0. The natural frequency and working frequency are the very important parameters to study the resonance. It is mandatory to avoid this resonating condition. These frequencies are distinguished with the help of ANSYS 18.0.*

Keywords—ANSYS, CFD, Frequency, Silencer, Vibration.

I. INTRODUCTION

Silencer looks like a cantilever structures which is one of the important parts of the exhaust system. At running condition of vehicle Silencers and Mufflers are subjected to various structural, thermal and vibration loads. The Silencer may get afailure or damaged because of many reasons, vibration from engine and road excitations are amongst them. The vibration failure happens mainly because of the resonant frequencies occurring in the defined frequency range. If we consider the road excitation, vertical accelerations are dominant in Mufflers [7]. The selection ofexhaust silencer is depends on the level of reduction in the engine exhaust noise. In order to select the exhaust silencer, we have to compromise between the mechanical, aerodynamic, structural and acoustical performance in conjunction with the cost of the resulting system. Hence, it is more important study the vibrations in deep which would further help to improve the efficiency of Silencer, improving life, minimize cracks and life of a silencer [1].The main objective to achieve Vibration optimization of Silencer using FEA (ANSYS).Silencers and Mufflers are used to control the engine exhaust noise. Mufflers and Silencers work in a similar way. The technical functionality between these two is very similar. A silencer is a traditional name given to a device which attenuates noise, Muffler is a device, designed to minimize the engine exhaust noise [3]. The basic function of the silencer is to reduce noise and pass exhaust generated in the engine.

II. NEED FOR ANALYSIS

In India, the Automobile silencer under study belongs to a popular 2-Wheeler manufacturer with the rated HP of the engine up to @7.69HP. at very high speed and temperature exhaust gases coming out from the engine. Silencer has to reduce noise, vibrations. While doing so it is subjected to thermal, vibration and fatigue failures which cause cracks. So it is necessary to analyze the vibrations which would further help to pursue future projects to minimize cracks, improving life and efficiency of the silencer.[1]

III. LITERATURE REVIEW

The first stage of design and analysis of exhaust system had done [1]. For the modeling of the exhaust system, he used conventional FEM package. The material property was the main parameter to study. To avoid the resonating condition, FFT analysis was carried out to distinguished natural frequency and working frequency. From his study it is cleared that to increase the dynamic performance, the thickness of the different parts plays an important role [1]. The advantages of different designs of Mufflers had listed [7]. He took into consideration different functional requirements of muffler like style, shape, size, cost, desired sound, durability, backpressure and adequate insertion loss [7].

The experimental and numerical study had performed for the tailpipe noise of a muffler for a wide range of throttle acceleration [6]. Thevalidation was done for the transient acoustic characteristics of a muffler in theanechoic chamber according to the Japanese Standard (JIS D 1616). At the 2nd order of engine rotational frequency, the simulation results are in good agreement with the experimental data CFD simulations had performed to calculate transfer matrix of an engine exhaust muffler [5]. The study considers the effect of with an without mean flow on the acoustic performance of a silencer. The developed CFD model has theability to predict the acoustic performance of a complex muffler. It also has theeffecton heat transfer to produce reasonable results of the exhaust noise [5].

Next study considers weak shock wave propagation inside silencer of exhaust pipe [4]. To solve Euler, unsteady,

https://dx.doi.org/10.22161/ijaers.5.1.2 ISSN: 2349-6495(P) | 2456-1908(O)

compressible, two-dimensional equations, 2nd order total variation diminishing (TVD) scheme was used. To study the effect of silencer configuration on weak shock wave propagation eight different models of the silencer used. At the inlet incident plane shock was assumed and its Mach no. was varied from 1.01 to 1.30. The pressure distribution and velocity field of flow system wereanalyzed on designed silencer [4].

IV. MODAL ANALYSIS OF EXISTING MODEL

Silencer model has been taken for the modal analysis. Table 1 shows the some of the properties which have been exclusively used in the simulation. Figure 1 shows the geometry file which has been drawn and model by using Ansys package. Figure 2 shows the meshing of existing silencer model. For the meshing Tetrahedral elements were used. The existing silencer model is somewhat complex, and because of this complexity, a simple tetrahedral mesh element was selected while meshing in Ansys. In the numerical simulations, geometry and meshing are the very crucial steps. So, special attention was given towards the modeling of thesilencer. After these two main steps, understanding of the physics is mandatory. For solving this complex system, initial and boundary condition plays an important role. Figure 3. shows the boundary condition used in the simulations. After meshing,simulations have been performed to obtain the model analysis for first five natural frequencies. These frequencies are shown in Table 2. The contours of natural frequencies of theexisting model have been shown in Figure. (4-8). On comparing all these natural frequencies, maximum bending was observed in mode 4.

Table 1.Material Properties.

Element type	Tetrahedral
Material	Steel
Mesh type	Solid Mesh
Density	7.85e-6 Kg/Mm3
Poisons ratio	0.3
Yield Strength	520Mpa

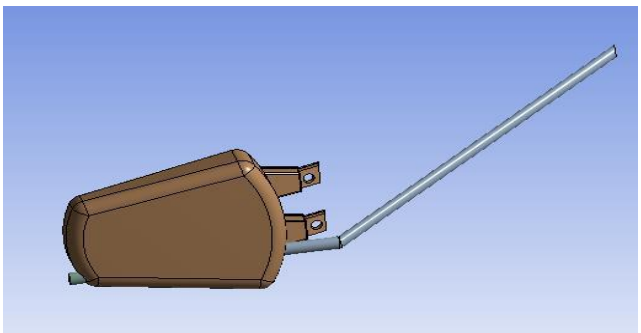

Fig. 1.Silencer existing model.

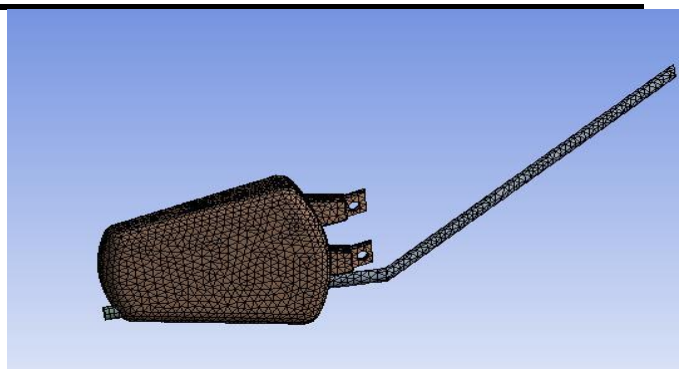

Fig. 2.Meshing of silencer mode

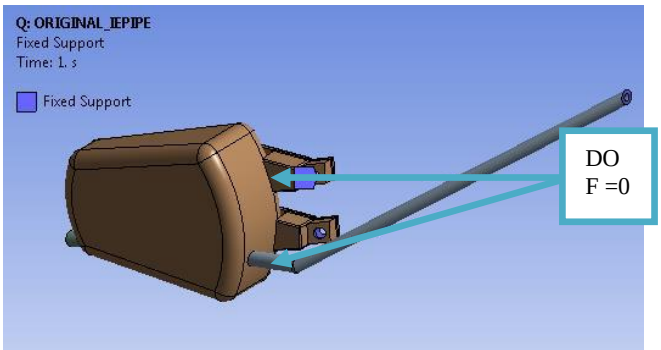

Fig. 3.Boundary conditions for existing silencer model

Geometry and meshing were done using ANSYS 18.0. After meshing simulations has been performed to obtain the model analysis for first five natural frequencies. These frequencies are shown inTable 2.

Table 2.Natural Frequency at first 5 modes for anExisting silencer.

Mode	1st	2nd	3rd	4th	5th
Frequency (Hz)	146.58	287.71	294.96	435.74	574.54

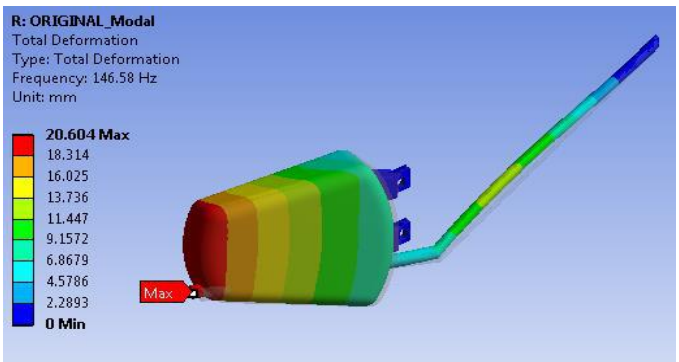

Fig. 4.mode frequency for 146.58Hz

https://dx.doi.org/10.22161/ijaers.5.1.2 *ISSN: 2349-6495(P) | 2456-1908(O)*

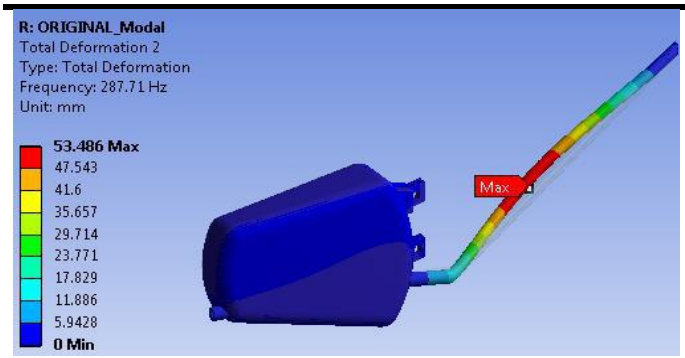

Fig.5.mode frequency for 287.71Hz.

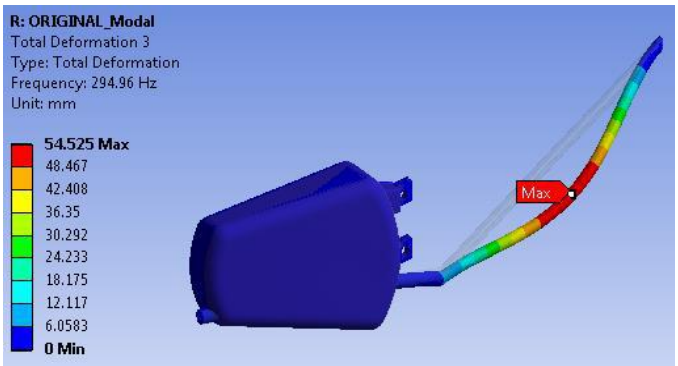

Fig.6.3rd mode frequency for 294.96Hz.

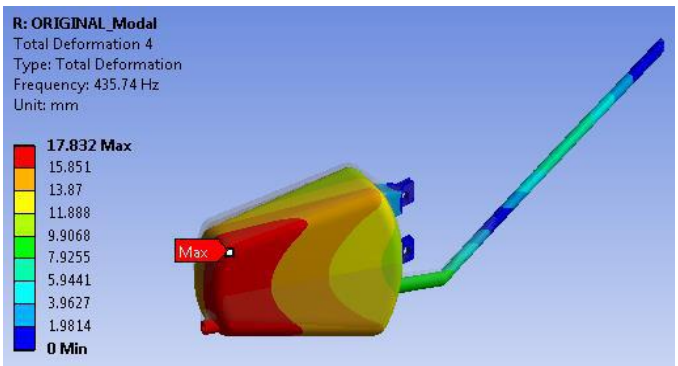

Fig.7.4th mode frequency for 435.74Hz

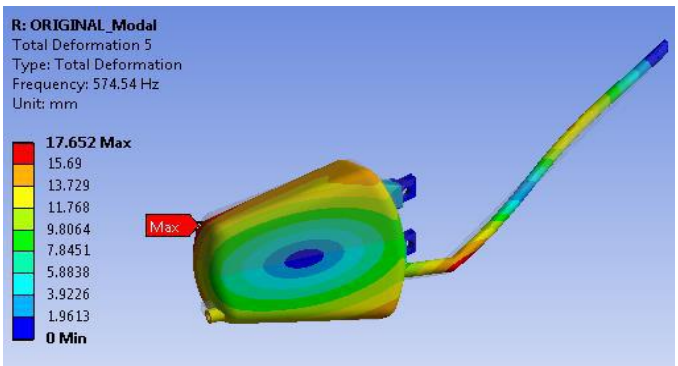

Fig.8.5th mode frequency for 574.54Hz.

V. HARMONIC ANALYSIS OF EXISTING MODEL

The harmonic analysis has been performed on the existing model. The mode 4 was selected for the harmonic analysis because it shows maximum bending. The excitation of 5G has been applied to the model. The boundary condition used in the simulation is shown in figure 9. In Table 3, boundary conditions are specified.

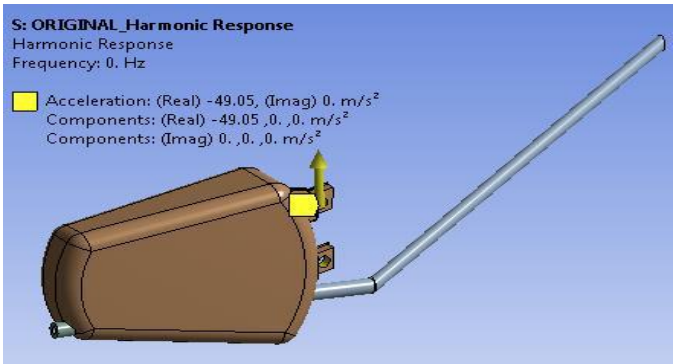

Fig.9.Boundary condition of existing model

Table 3.Boundary condition of existing model.

Frequency spacing	Linear
Range Minimum	0 Hz
Range Maximum	1000 Hz
Solution Interval	10
User Defined Frequencies	Off
Solution method	Mode Superposition
Include Residual Vector	No
Cluster Result	No

Figure 10. gives the clear idea regarding the amplitude in Mega-Pascal (MPa) and natural frequencies of different modes. The maximum frequency was observed in mode four, Hence it corresponds to the maximum amplitude of 13.981 MPa. For the same mode, the equivalent stress is found 2.143 MPa (See Figure 11).

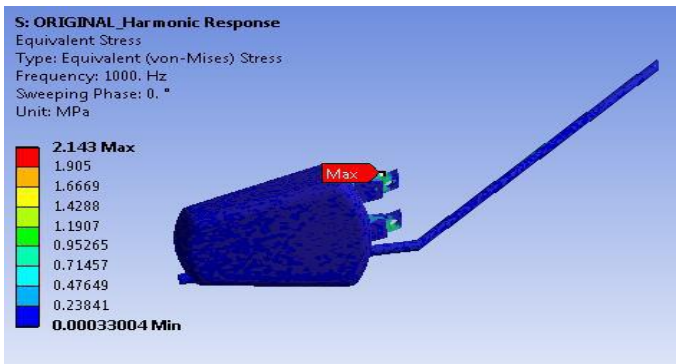

Fig.10.Equivalent Stress of existing model

https://dx.doi.org/10.22161/ijaers.5.1.2 *ISSN: 2349-6495(P) | 2456-1908(O)*

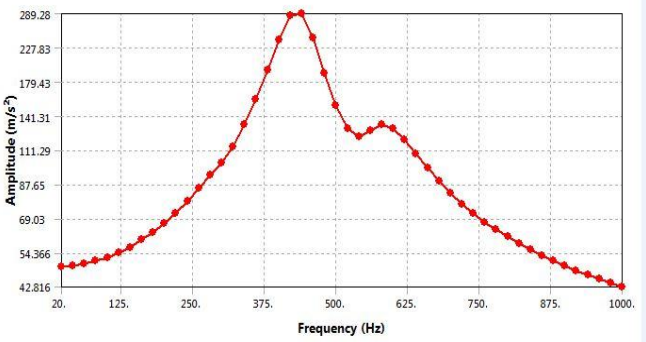

Fig.11.Acceleration frequency response of theexisting model.

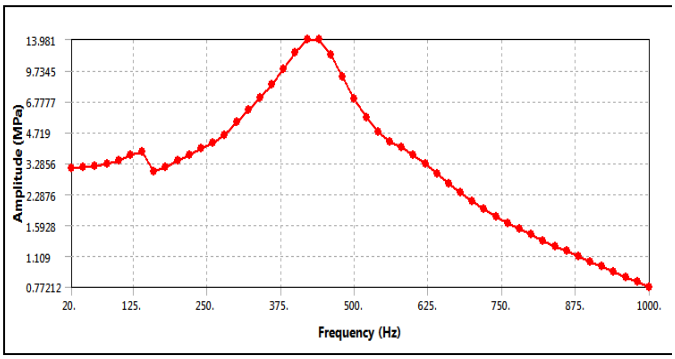

Fig.12.Maximum principal stress response of existing model

VI. NEED OF MODIFICATION OF SILENCER

According to Jis D 1601 (JapaneseStandard), 33 Hz to 67 Hz is the damageable frequencies of vibration testing for automobile silencer. Vibration frequencies are necessary to be reduced, these causes more vibration hence noise in the exhaust system. Mode 4 shows more bending, so we took mode 4,an optimized modal for reducing the vibration. For reducing the failure in the existing model we add single stiffener in the existing model.

VII. ADDITION OF SINGLE STIFFENER IN OPTIMIZED MODEL

Single Stiffener is added to shift the frequency of the optimized model. First, we add a single stiffener and analysis results. The analysis was done and first five natural frequencies are determined and tabulated in Table 4. Figure13. Shows the modified geometry in which a stiffener is added. After modifying the geometry, thenew mesh was generated with the Ansys package. Fig.14shows the meshing of the modified geometry. The boundary condition for the modified model is shown in Fig. 15.

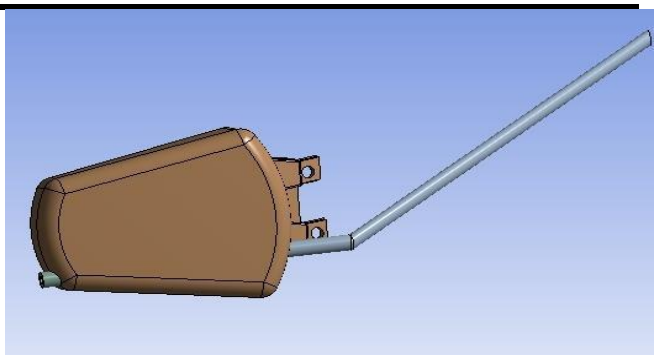

Fig.13.Modified Model by adding a single stiffener plate

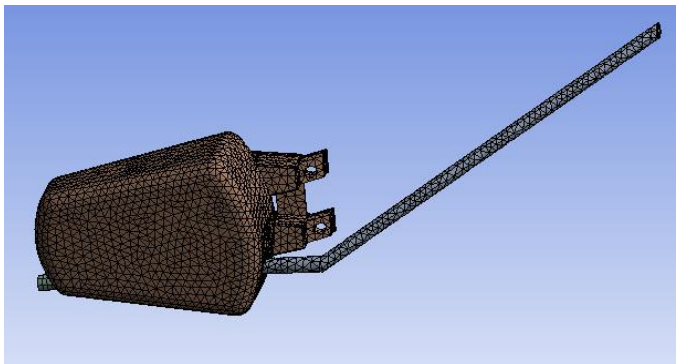

Fig.14. Discretized Modified Model by adding a single stiffener plate

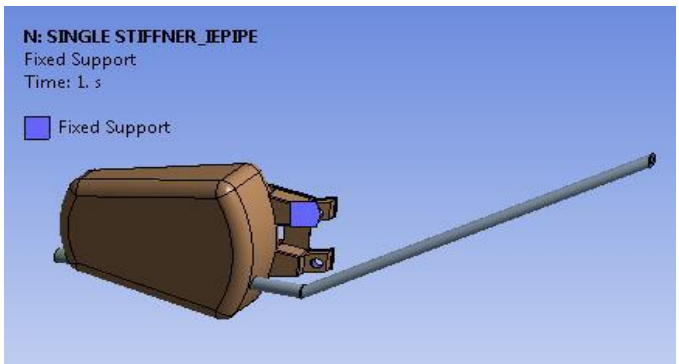

Fig. 15. Boundary conditions for modified model by adding a single stiffener plate

VIII. MODAL ANALYSIS OF OPTIMIZED MODEL

The modification was done in the existing silencer model with adding a stiffener plate. After this modification, modal analysis has been performed and itsresults in ten natural frequencies. The contour of total deformation is shown for different natural frequencies in Figure. (16-25). The first ten natural frequencies after the modification is tabulated in Table 4.

https://dx.doi.org/10.22161/ijaers.5.1.2 ISSN: 2349-6495(P) | 2456-1908(O)

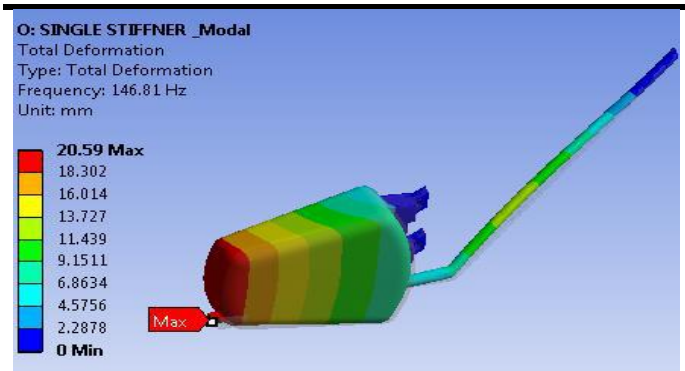

Fig.16.1st mode of modified silencer

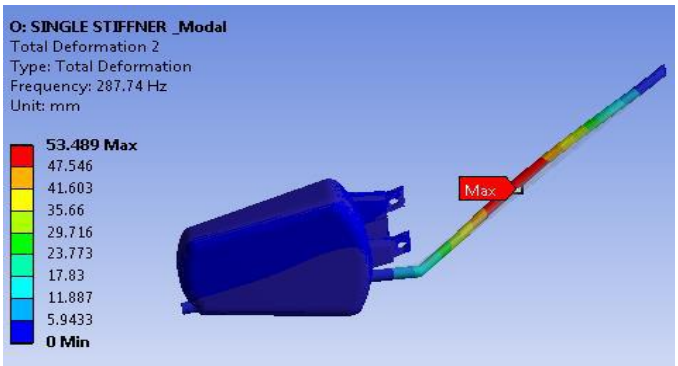

Fig.17.2nd mode of themodified silencer.

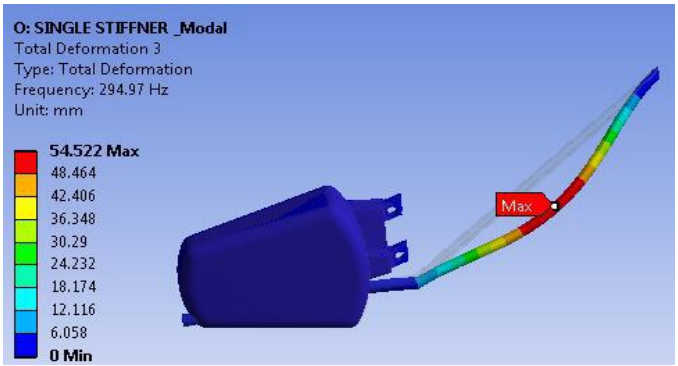

Fig.18.3rd mode of themodified silencer.

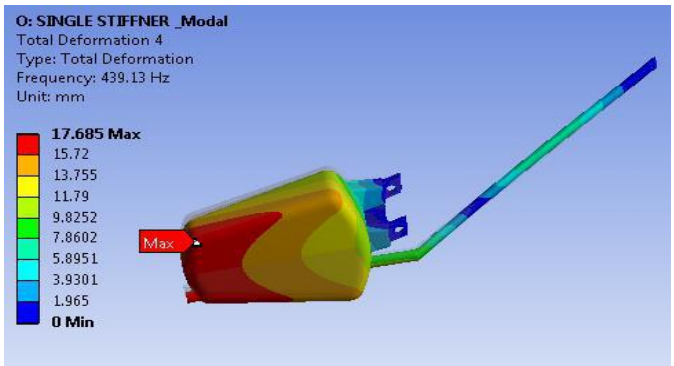

Fig.19.4th mode of themodified silencer.

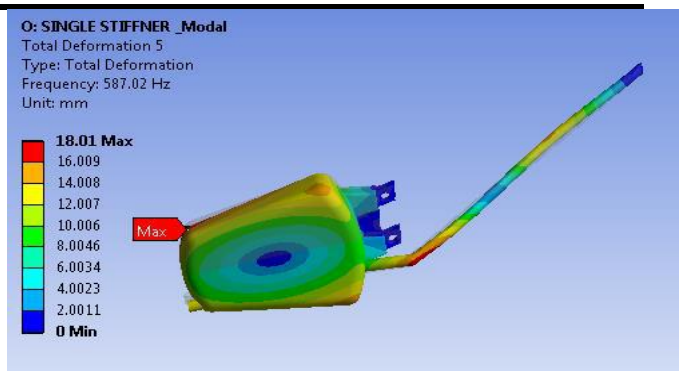

Fig.20.5th mode of themodified silencer.

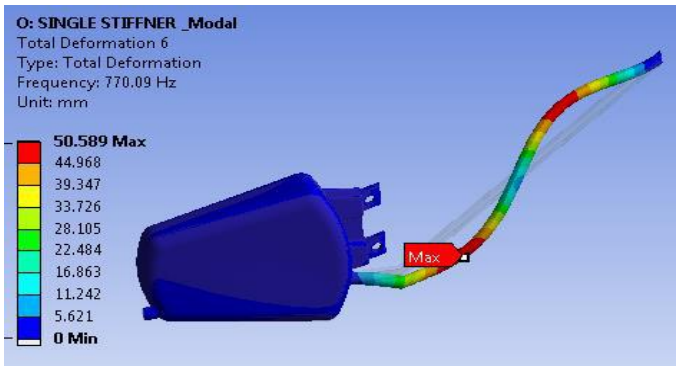

Fig.21.6th mode of modified silencer by adding single stiffener.

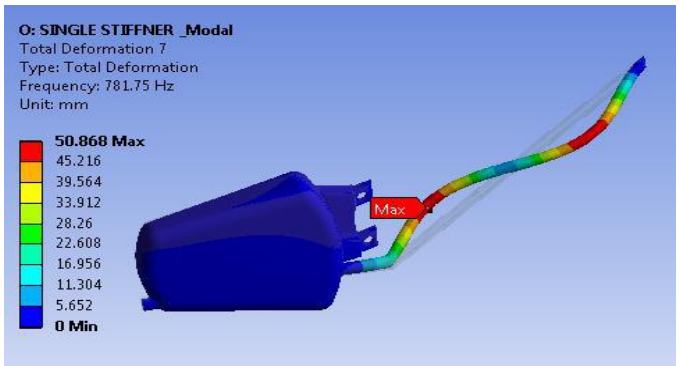

Fig.22. 7th mode of modified silencer by adding asingle stiffener

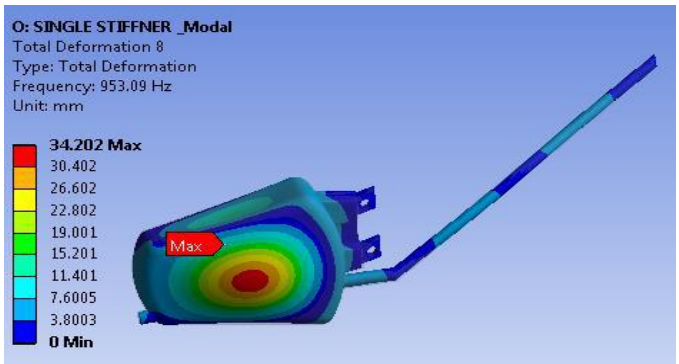

Fig.23. 8th mode of modified silencer by adding single stiffener

https://dx.doi.org/10.22161/ijaers.5.1.2 ISSN: 2349-6495(P) | 2456-1908(O)

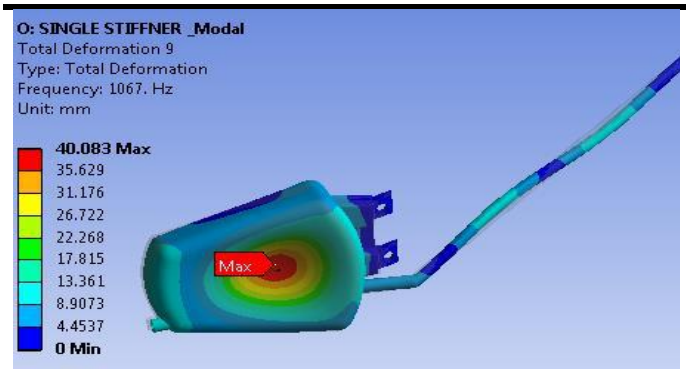

Fig.24. 9th mode of modified silencer by adding asingle stiffener

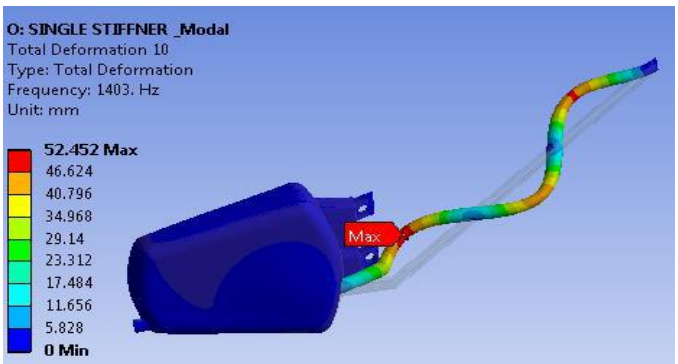

Fig.25. 10th mode of modified silencer by adding single stiffener.

Table 4.Natural Frequency at first 10 modes for anoptimized silencer.

Mode	1st	2nd	3rd	4t	5t	6t	7t	8t	9th	10th
Frequency	146.	287.	294.	43	58	77	78	95	1067	1403

IX. HARMONIC ANALYSIS OF OPTIMIZED MODEL

After the adding a single stiffener plate again the harmonic analysis has been done in thesame manner as previously done for the existing model. Table 5 shows the boundary condition used in the modified model. The same procedure has been performed for the harmonic analysis. The excitation of 5g had applied to the modified model. Figure 26 shows the boundary condition used in the modified model.

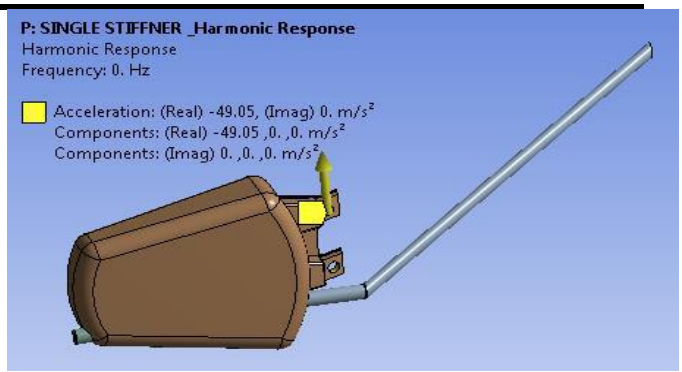

Fig.26.Boundary Conditions of optimized model.

Amplitude vs. frequency plot for the modified model after the addition of single stiffener plate is shown in Figure 29. The maximum amplitude of the stress is found 7.0695 MPa at 435 frequency. The corresponding equivalent stress is 1.9199 MPa (see Figure 29). The acceleration and frequency response is also plotted in Figure 27. The maximum acceleration of 156.85 m/s^2 is obtained at the natural frequency of 435 Hz.

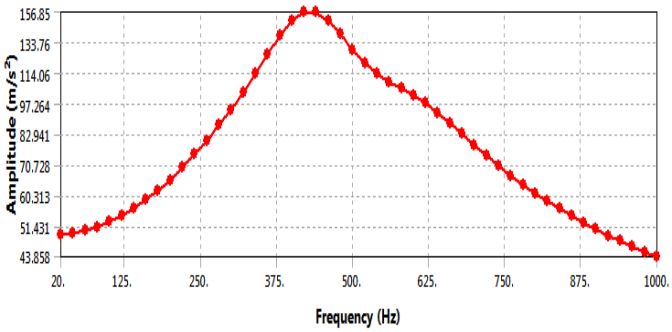

Fig.27.Acceleration frequency response of theoptimized model.

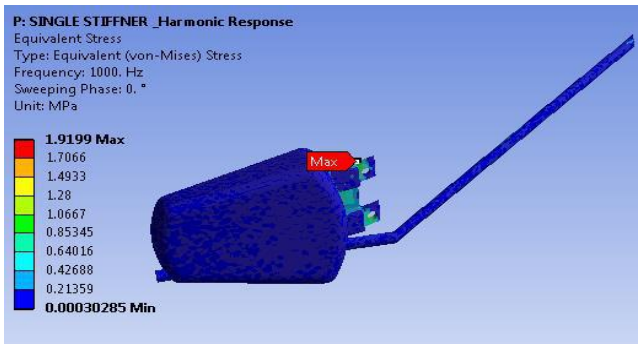

Fig.28.Maximum principal stress response of optimized model

https://dx.doi.org/10.22161/ijaers.5.1.2 ISSN: 2349-6495(P) | 2456-1908(O)

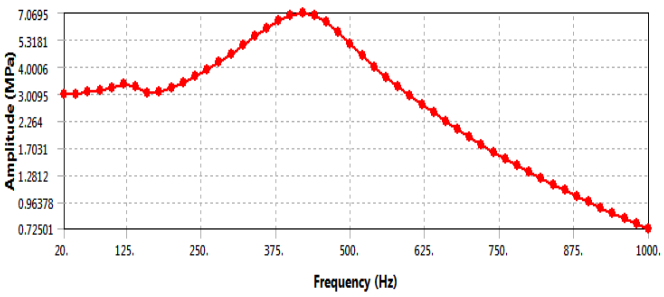

Fig.29.Maximum principal stress response of optimized model

X. EXPERIMENTAL VALIDATION

The silencer model has been taken for the experiment. The experiment includes the testing of vibration by theaccelerometer.Fig.30 shows the experimental setup for amodified model having single stiffener. The sensor was mounted at the top of the modified silencer as shown in Fig.30. To impose the vibration to the model a hammer has been applied to the silencer. Because of the hammering action, the vibrations get induced in the model. These vibrations are then sensed with the sensor and corresponding readings are shown by theaccelerometer.

Fig.30.Experimentation System

The experimental validation is done by using FFT (Fast Fourier Transform) analyzer. The FFT spectrum analyzer samples the input signal computes the magnitude of its sine and cosine components and displays the spectrum of these measured frequency components. The advantage of this technique is its speed. Because FFT spectrum analyzers measure all frequency components at the same time, the technique offers the possibility of being hundreds of times faster than traditional analog spectrum analyzers.
The result obtained by FFT analyzer for first six natural frequencies are determined and tabulated as follow.

Table 5.First six modal frequency of vibration by FFT analyzer

Mode	1	2	3	4	5	6
(Frequency in Hz)	97	391	614	775	958	1066

Frequency response function of the exhaust system is shown in Fig.31for different modes.

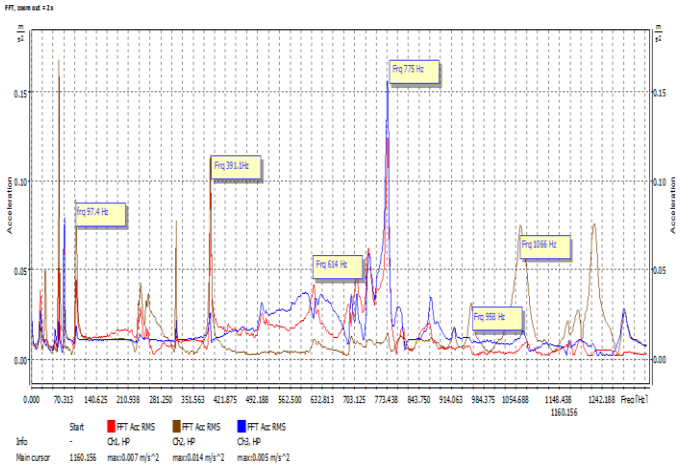

Fig.31.Frequency response function of the exhaust system for different modes.

XI. RESULT

Table 17 shows the comparison of the natural frequencies of vibration silencer by FEM package and FFT analyzer. The comparison shows that the natural frequency by both methods is nearly same (see Fig.32).

Table 6.Six modal frequency of vibration.

Mode	FEM (Frequency in Hz)	FFT(Frequency in Hz)
1	146	97
2	439	391
3	587	614
4	770	775
5	953	958
6	1067	1066

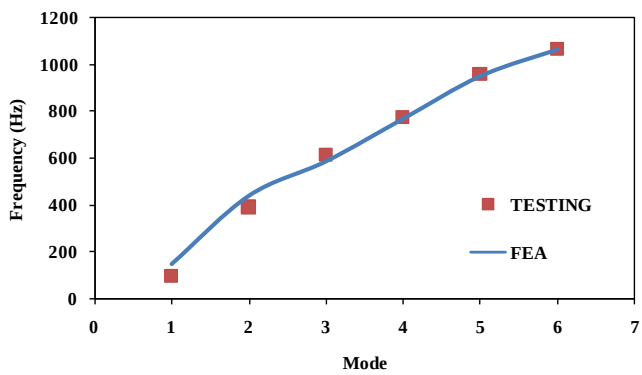

Fig.32.Comparison of FEA and testing

https://dx.doi.org/10.22161/ijaers.5.1.2 *ISSN: 2349-6495(P) | 2456-1908(O)*

XII. CONCLUSION

The silencer natural frequencies have been calculated by using the ANSYS package and by FFT analyzer. By both the method the natural frequencies are nearly same and that are useful while the design of silencer to avoid the resonance.The natural frequency silencer has been calculated by using the Ansys 18.0. The modification in the design has enhanced the dynamic performance of a silencer. Particular modification in design incorporates the addition of stiffener in the modified silencer. The amplitude of acceleration is reduced from 289.28 m/s^2 to 156.85 m/s^2 due to theaddition of stiffeners. Maximum Principal Stress value reducedto alower value than existing design.from 13.981Mpa to 7.0695Mpa. Vibration modes of silencer haven't been drastically altered, but stiffener method can be used to reduce excitations and helptoincrease fatigue life and efficiency of the silencer.

REFERENCES

[1] V.P. Patekar and R.B. Patil " Vibrational Analysis of Automotive Exhaust Silencer Based on FEMand FFT Analyzer" International Journal on Emerging Technologies 3(2): 1-3(2012)

[2] Amit Mahadeo Asabe1, Prof.Pravin P Hujare "Performance Enhancement ofAutomotive Silencer Using Finite Element Analysis" International Journal of Engineering Science Invention ISSN (Online): 2319 – 6734, ISSN (Print): 2319 – 6726 www.ijesi.org Volume 3 Issue 8, August 2014, PP.14-22

[3] Silex Exhaust Slincer

[4] H. D. Kima, Y.-H. Kweona, T. Setoguchib "A study of the weak shock wave propagating through" Journal of Sound and Vibration 275, 2004 PP.893–915engine exhaust silencer system.

[5] Lian-yun LIU, Zhi-yong HAO, Chi LIU "CFD analysis of a transfer matrix of exhaust muffler with mean flow and prediction of exhaust noise" Appl Phys & Eng. 2012 13(9), PP. 709-716

[6] Takashi Yasuda, Chaoqun Wua, Noritoshi Nakagawa, Kazuteru Nagamura "Predictions and experimental studies of the tail pipe noise of an automotive muffler using a one dimensional CFD model" Applied Acoustics 71 2010, PP. 701–707

[7] Potente Daniel "General design principles for an automotive muffler" November 2005, PP. 9-11